杆端关节轴承

Rod ends

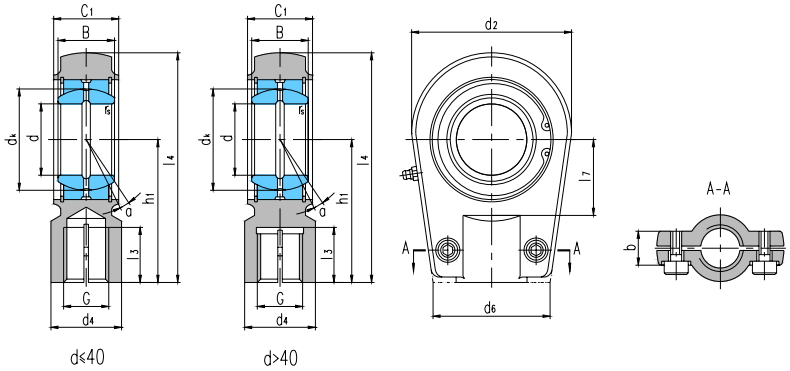

滑动摩擦副：钢 / 钢

Sliding contact surfaces：Steel / Steel

轴承型号 Bearing number	外形尺寸 Dimensons mm															额定载荷 Load ratings kN		锁紧螺钉 Screw	重量 Weight ≈kg
	d	B	d_K	C_1	d_2	G 6H	h_1	l_3	l_4	l_7	d_4	d_6	b	r_s	α° ≈	动载荷 Dynamic	静载荷 Static		
SIR20ES	20	16	29	19	56	M16×1.5	50	17	80	25	25	46	20	0.3	9	30	81	M8×20	0.44
SIR25ES	25	20	35.5	23	56	M16×1.5	50	17	80	25	25	46	21	0.6	7	48	72	M8×20	0.47
SIR30ES	30	22	40.7	28	64	M22×1.5	60	23	94	30	32	50	26	0.6	6	62	106	M8×25	0.77
SIR35ES	35	25	47	30	78	M28×1.5	70	29	112	38	40	66	28	0.6	6	79	153	M10×30	1.24
SIR40ES	40	28	53	35	94	M35×1.5	85	36	135	45	49	76	33	0.6	7	99	250	M10×35	2.12
SIR50ES	50	35	66	40	116	M45×1.5	105	45	168	55	61	90	37	0.6	6	156	365	M12×40	3.74
SIR60ES SIR60ES-D[1)]	60	44	80	50	130	M58×1.5	130	59	200	65	75	120	46	1	6	245	400	M16×45	6.49
SIR70ES SIR70ES-D[1)]	70	49	92	55	154	M65×1.5	150	66	232	75	86	130	51	1	6	313	540	M16×50	9.88
SIR80ES SIR80ES-D[1)]	80	55	105	60	176	M80×2	170	81	265	80	105	160	55	1	6	400	670	M20×55	14.2
SIR90ES SIR90ES-D[1)]	90	60	115	65	206	M100×2	210	101	323	90	124	180	60	1	5	488	980	M20×60	23.5
SIR100ES	100	70	130	70	231	M110×2	235	111	360	105	138	200	65	1	7	607	1120	M24×65	32.14
SIR110ES	110	70	140	80	266	M120×3	265	125	407	115	152	220	74	1	6	654	1700	M24×80	47.6
SIR120ES	120	85	160	90	340	M130×3	310	135	490	140	172	257	84	1	6	950	2900	M24×80	72

[1)]杆端体采用碳钢锻造。Rod end is made of carbon steel.

可装自润滑向心关节轴承。Can supply rod ends with maintenance-free spherical plain bearing.

若是左旋螺纹，轴承型号和螺纹标记需加“L”和“左”，例如：SILR40ES　M35×1.5 左-6H。

For left-hand thread，suffix “L” is added to bearings number and thread sign，e.g. SILR40ES　M35×1.5L-6H.