>> Linear motion ball slide units series

SCS...UU SCS...LUU

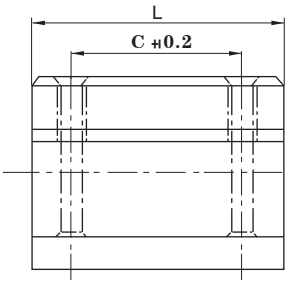

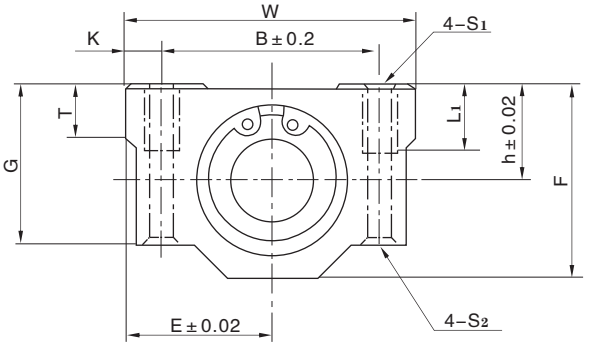

Unit Designation	Dimensions (mm)													Slide bush			Weight (kg/m)
	T	h	E	W	L	F	G	B	C	K	S1	S2	L1	Designation	Basic load rating dynamic CN	Basic load rating static CoN	
SCS 6UU	6	9	15	30	25	18	15	20	15	5	M4	3.4	8	LM 6UU	206	265	34
SCS 8UU	6	11	17	34	30	22	18	24	18	5	M4	3.4	8	LM 8UU	274	392	52
SCS10UU	8	13	20	40	35	26	21	28	21	6	M5	4.3	12	LM 10UU	372	549	92
SCS 12UU	8	15	21	42	36	28	24	30.5	26	5.75	M5	4.3	12	LM 12UU	510	784	102
SCS 13UU	8	15	22	44	39	30	24.5	33	26	5.5	M5	4.3	12	LM 13UU	510	784	120
SCS 16UU	9	19	25	50	44	38.5	32.5	36	34	7	M5	4.3	12	LM 16UU	774	1180	200
SCS 20UU	11	21	27	54	50	41	35	40	40	7	M6	5.2	12	LM 20UU	882	1370	255
SCS 25UU	12	26	38	76	67	51.5	42	54	50	11	M8	7	18	LM 25UU	980	1570	600
SCS 30UU	15	30	39	78	72	59.5	49	58	58	10	M8	7	18	LM 30UU	1570	2740	735
SCS 35UU	18	34	45	90	80	68	54	70	60	10	M8	7	18	LM 35UU	1670	3140	1100
SCS 40UU	20	40	51	102	90	78	62	80	60	11	M10	8.7	25	LM 40UU	2160	4020	1590
SCS 50UU	25	52	61	122	110	102	80	100	80	11	M10	8.7	25	LM 50UU	3820	7940	3340
SCS 60UU	30	58	66	132	122	114	94	108	90	12	M12	10.7	25	LM 60UU	4700	10000	4270
SCS 16LUU	9	19	25	50	85	38.5	32.5	36	60	7	M5	4.3	12	LM 16LUU	774	1180	200
SCS 20LUU	11	21	27	54	96	41	35	40	70	7	M6	5.2	12	LM 20LUU	882	1370	255
SCS 25LUU	12	26	38	76	130	51.5	42	54	100	11	M8	7	18	LM 25LUU	980	1570	600
SCS 30LUU	15	30	39	78	140	59.5	49	58	110	10	M8	7	18	LM 30LUU	1570	2740	735
SCS 35LUU	18	34	45	90	155	68	54	70	120	10	M8	7	18	LM 35LUU	1670	3140	1100
SCS 40LUU	20	40	51	102	175	78	62	80	140	11	M10	8.7	25	LM 40LUU	2160	4020	1590