## >> Rectangle wheel linear rail series (Patent NO：ZL02280208.8)

### SG

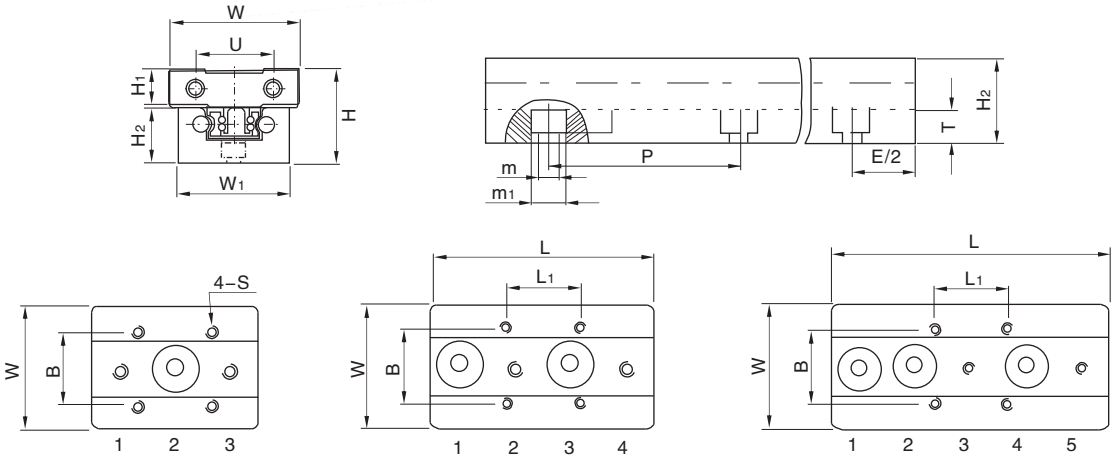


| SG | | Complete Set | | Rail SGR | | | | | | | | | Slide SGB | | | | | | | | | | | | | | |
|---|---|---|---|---|---|---|---|---|---|---|---|---|---|---|---|---|---|---|---|---|---|---|---|---|---|---|---|
| SGR | SGB | H | W | $W_1$ | $H_2$ | dp | P | Shaft (diameter) | weight (k/m) | T | $m_1$ | m | W | $H_1$ | L | B | $L_1$ | S | Wheel Number | Eccentric Wheel Position | Basic Driving Force Safety Load (N) Yo | Basic Driving Force Safety Load (N) Zo | Dynamic Torque (N.M) Mxo | Dynamic Torque (N.M) Myo | Dynamic Torque (N.M) Mzo | Weight (gf/m) |
| 15N | -3 | 32 | 44 | 38 | 18.5 | 6 | 120 | 6 | 1,651 | 8 | 8 | 4.5 | 44 | 12 | 60 | 26 | 26 | M5 | 3 | 2 | 490 | 460 | 10.2 | 9.2 | 9.8 | 110 |
| | -4 | | | | | | | | | | | | | | 80 | | | | 4 | 1,3 | 700 | 660 | 14.5 | 13.2 | 14 | 145 |
| | -5 | | | | | | | | | | | | | | 100 | | | | 5 | 1,1,4 | 980 | 920 | 20.3 | 37 | 39 | 185 |
| 15 | -3 | 32 | 46 | 46 | 18.5 | 6 | 120 | 6 | 1,764 | 8 | 8 | 4.5 | 46 | 12 | 52 | 32 | 36 | M5 | 3 | 2 | 490 | 460 | 13.8 | 7.4 | 7.8 | 105 |
| | -4 | | | | | | | | | | | | | | 72 | | | | 4 | 1,3 | 700 | 660 | 19.8 | 21.1 | 22.4 | 140 |
| | -5 | | | | | | | | | | | | | | 84 | | | | 5 | 1,1,4 | 980 | 920 | 27.7 | 44.3 | 47 | 170 |
| 20N | -3 | 36 | 47 | 47 | 22.5 | 6 | 120 | 6 | 2,247 | 9 | 9.5 | 5.5 | 47 | 12 | 80 | 38 | 30 | M6 | 3 | 2 | 700 | 980 | 29.4 | 25.4 | 18.2 | 195 |
| | -4 | | | | | | | | | | | | | | 106 | | | | 4 | 1,3 | 1000 | 1400 | 42 | 72.8 | 52 | 265 |
| | -5 | | | | | | | | | | | | | | 132 | | | | 5 | 1,1,4 | 1400 | 1960 | 84.2 | 129 | 92.4 | 350 |
| 20 | -3 | 36 | 60 | 60 | 22.5 | 6 | 120 | 8 | 2,744 | 9 | 9.5 | 5.5 | 60 | 12 | 72 | 50 | 40 | M6 | 3 | 2 | 700 | 980 | 42.1 | 21.5 | 15.4 | 210 |
| | -4 | | | | | | | | | | | | | | 100 | | | | 4 | 1,3 | 1000 | 1400 | 60.2 | 61.6 | 44 | 280 |
| | -5 | | | | | | | | | | | | | | 116 | | | | 5 | 1,1,4 | 1400 | 1960 | 84.2 | 129 | 92.4 | 350 |
| 25 | -3 | 44 | 70 | 69 | 26 | 7 | 120 | 10 | 3,873 | 10 | 11 | 6.5 | 70 | 16.3 | 100 | 57 | 45 | M8 | 3 | 2 | 1260 | 1470 | 67.62 | 48.51 | 41.58 | 460 |
| | -4 | | | | | | | | | | | | | | 133 | | | | 4 | 1,3 | 1800 | 2100 | 96.6 | 138.6 | 118.8 | 615 |
| | -5 | | | | | | | | | | | | | | 166 | | | | 5 | 1,1,4 | 2520 | 2940 | 135.0 | 291.06 | 249.48 | 775 |
| 35 | -3 | 55 | 100 | 90 | 35 | 8.5 | 160 | 12 | 6,442 | 12 | 14 | 8.5 | 100 | 18 | 140 | 82 | 62 | M10 | 3 | 2 | 2800 | 2800 | 159.6 | 126 | 128 | 1100 |
| | -4 | | | | | | | | | | | | | | 185 | | | | 4 | 1,3 | 4000 | 4000 | 228 | 360 | 360 | 1450 |
| | -5 | | | | | | | | | | | | | | 230 | | | | 5 | 1,1,4 | 5600 | 5600 | 319.2 | 758 | 756 | 1835 |